1.Function

EBS9G series switch disconnectors are used in AC 50 / 60Hz, rated voltage 415V and below, rated voltage up to 100A power distribution and control circuit, mainly as a terminal combination electric appliance switch, as the line is not frequent conversion. IEC60947-3.

2.Nomenclature

EBS 9G - 125 / 1P

- 1P — Poles
- 125 — Frame level
- 9G — Design code
- EBS — Company code

3.Specifications

Type	Standard		IEC/EN 60947-3
Electrical features	Poles	P	1, 2, 3, 4
	Rated voltage Ue	V	240/415
	Rated current In	A	32, 40, 50, 63, 80, 100, 125
	Rated frequency	Hz	50/60
	Rated impulse withstand voltage(1.2/50)Uimp	V	4000
	Rated short-time withstand current Icw		12Ie, 1s
	Rated making and breaking capacity		3Ie, 1.05Ue, cosΦ=0.65
	Rated short circuit making capacity		20Ie, t=0.1s
	Dielectric test voltage at ind. Freq. for 1min	kV	2.5
	Insulation voltage Ui	V	500
	Pollution grade		2
Mechanical features	Electrical life	t	1500
	Mechanical life	t	8500
	Protection grade		IP20
	Ambient temperature (with daily average≤35°C)	°C	-5~+40
Installation	Terminal size top / bottom for cable and pin-type busbar	mm²	35
		AWG	18-1/0

4.Conductor

Copper cross-section(mm²)	Rated current In(A)
16	50<In≤63
25	63<In≤80
35	80<In≤125

5.Dimensions

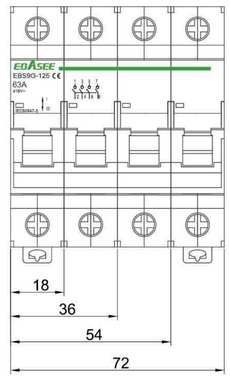

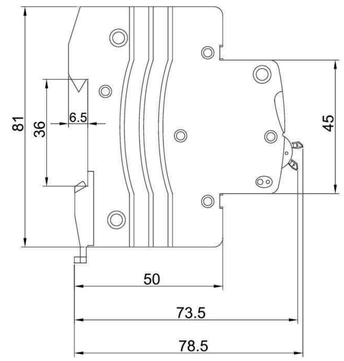

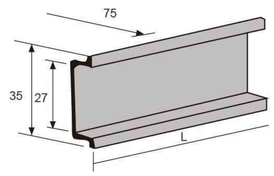

6.Order Note

Following items should be marked when ordering	Ordering sample
Product name, model & frame level Poles Rated current Quantity	To order EBS9G-125 isolating switch, frame level 125A, 2P, rated current 80A, quantity 100 pieces, should be marked: EBS9G-125/2P 80A, 100PCS.