Specifications and technical data are subject to change without notice.
Please contact to confirm relevant information on ordering.

No.18, Gutang Rd, Shanghai 201209, China
+86 21 5032 0898
+86 21 5032 0828
www.ebasee.com

PHOTOVOLTAIC PRODUCT

Copy right reserved EBS.NO.2023004

EBASEE

Smart Living Green Ebasee

PHOTOVOLTAIC PRODUCT

COMPANY PROFILE

As a leading supplier in the low voltage electrical industry, Shanghai Ebasee Electric Co., Ltd. products have been used for residential, commercial and industrial applications. EBASEE brand is recognized for its quality and reliability in an ever-increasing number of markets worldwide. So far EBASEE products have been testified by international labs including BV, TUV, Intertek, with KEMA, CB, SEMKO, RoHS, CE, and CCC etc.

With qualified raw materials and components supply, all products are manufactured by EBASEE's defined international specifications. We have 4 semi-auto production lines, up-to-date quality control facilities, well-trained and experienced workers. Moreover, with a technical R & D team and fully equipped CNAS laboratory, EBASEE factory can carry out efficient new products development, daily production and QC.

EBASEE have a wide range of cooperations with world leading companies in new products development, OEM and ODM cooperation. Meanwhile, we process the idea of green and smart energy, working with universities such as Xi'an Jiao Tong University to get more intelligent and environmental-friendly electric solutions.

EBASEE focused on achieving growth through the success of worldwide partners. Guided by the philosophy of "customer-oriented", powered by the idea of "quick response and flexible supply", EBASEE support our worldwide partners to compete against established players, to deliver the most systematic and cost-effective products and service in the market.

"Smart Living, Green EBASEE"

01 Verified Custom Manufacturer

02 Supplier of Fortune 500 Companies

03 Registered Trademarks

Quality is our culture!

CERTIFICATE

EBASEE products have been approved by international labs including BV, TUV, Intertek CQC, with KEMA, CB, SEMKO, RoHS, CE, and CCCs etc.

1.General

A range of 10x38mm fuse links specifically designed for protecting photovoltaic strings, these fuse links are capable of interrupting low overcurrents associated with faulted photovoltacic string arrays (reverse current, multi-array fault) rated insulated voltage up to 690V, conventional free air thermal current up to 32A; compliant with IEC60269-1 and IEC60269-6.

2.Specification

Standard	IEC60269-1, IEC60269-6
Fuse base	RT18Z-32/RT18Z-32X
Fuse link	10X38mm
Pole	1P, 2P, 3P, 4P
Class of operation	gPV
Time constant	1-3ms
Rated voltage Ue(V DC)	1000
Rated Current In(A)	1-32A
Biggist block ability(kA)	20
The most high power consumption(W)	3.5

3.Tripping Characteristic

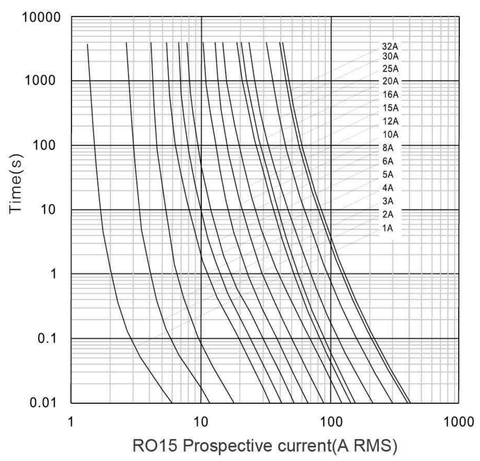

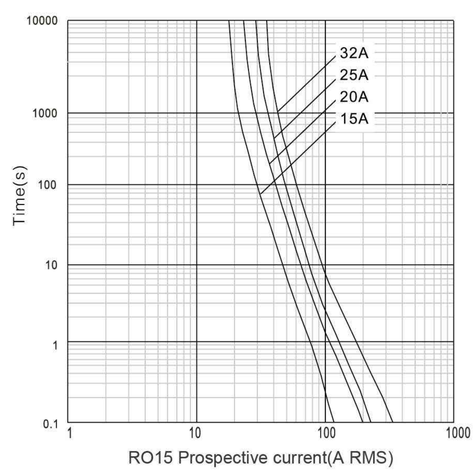

4.Dimensions

RT18Z-32/RT18Z-32X 32A 1000VDC 10X38

- Rated voltage: 1000VDC
- Class of operation: gPV
- Standard: IEC 60269-6

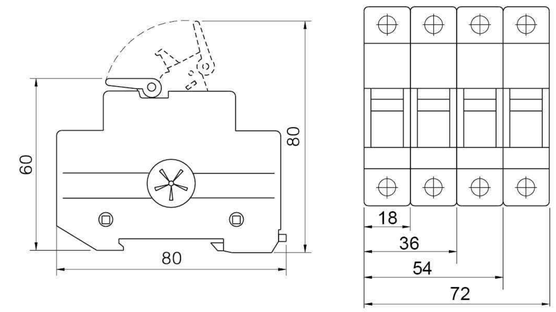

RO15Z 10X38 1-32A 1000VDC

- Fuse size: 10X38mm
- Class of operation: gPV
- Standard: IEC 60269-6
- Breaking capacity: 20kA
- Time constant: 1-3ms

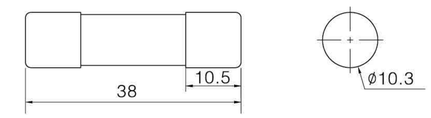

RO15Z

5.Order Note

Following items should be marked when ordering	Ordering sample
Product name, poles Rated current With indicator or without Quantity	To order the RT18Z-32 Fuse, 1P, rated current is 32A, and quantity is 100pcs, should be marked: Fuse RT18Z-32 1P 32A, 100PCS.