Specifications and technical data are subject to change without notice.
Please contact to confirm relevant information on ordering.

No.18, Gutang Rd, Shanghai 201209, China
+86 21 5032 0898
+86 21 5032 0828
www.ebasee.com

PHOTOVOLTAIC PRODUCT

Copy right reserved EBS.NO.2023004

EBASEE

Smart Living Green Ebasee

PHOTOVOLTAIC PRODUCT

COMPANY PROFILE

As a leading supplier in the low voltage electrical industry, Shanghai Ebasee Electric Co., Ltd. products have been used for residential, commercial and industrial applications. EBASEE brand is recognized for its quality and reliability in an ever-increasing number of markets worldwide. So far EBASEE products have been testified by international labs including BV, TUV, Intertek, with KEMA, CB, SEMKO, RoHS, CE, and CCC etc.

With qualified raw materials and components supply, all products are manufactured by EBASEE's defined international specifications. We have 4 semi-auto production lines, up-to-date quality control facilities, well-trained and experienced workers. Moreover, with a technical R & D team and fully equipped CNAS laboratory, EBASEE factory can carry out efficient new products development, daily production and QC.

EBASEE have a wide range of cooperations with world leading companies in new products development, OEM and ODM cooperation. Meanwhile, we process the idea of green and smart energy, working with universities such as Xi'an Jiao Tong University to get more intelligent and environmental-friendly electric solutions.

EBASEE focused on achieving growth through the success of worldwide partners. Guided by the philosophy of "customer-oriented", powered by the idea of "quick response and flexible supply", EBASEE support our worldwide partners to compete against established players, to deliver the most systematic and cost-effective products and service in the market.

"Smart Living, Green EBASEE"

01 Verified Custom Manufacturer

02 Supplier of Fortune 500 Companies

03 Registered Trademarks

Quality is our culture!

CERTIFICATE

EBASEE products have been approved by international labs including BV, TUV, Intertek CQC, with KEMA, CB, SEMKO, RoHS, CE, and CCCs etc.

1.General

ELR2 Series DC Isolator Switch in plastic enclosure is applied to 1~20KW residential or commercial photovoltaic system, placed between photovoltaic modules and inverters. Arcing time is less than 8ms, that keeps solar system more safe. To ensure its stability and long service life, our products are made by components with optimum quality. Max voltage is up to 1200V DC. It holds a safe lead among similar products.

- IP66 rated enclosure, UV Resistant
- 4 x M20 knock holes
- The handle can be padlocked in the “OFF” position
- MC4 plugs can be selected for convenient connection and space saving
- 2 Poles, 4Poles are available (Single I Double String)
- Standard: IEC60947-3, AS60947.3
- DC-PV2, DC-PV1, DC-21B
- 16A, 25A, 32A, DC1200V

2.Nomenclature

1. Company code
2. Ingress protection
3. Wiring type/rated current
4. NO enclosure style

Note

1. Air Temperature: Operating temperature range is -30°C to +70°C, and storage temperature range is -40°C to +70°C.

2. Altitude: The installation location's altitude should not exceed 2000 meters. If it's above 2000 meters, the equipment's capacity should be derated.

3. Atmospheric Conditions: The relative humidity of the air at the installation location should not exceed 50% at +40°C, and it should not exceed 90% at an average temperature of the most humid month (+20°C).

4. Installation Category: Installation falls under Category II and III.

5. Pollution Degree: Pollution degree is 2.

6. Installation Conditions: The inclination between the installation surface and the vertical plane should not exceed 5°. The installation location should be free from significant impacts and vibrations.

7. Wiring Method: Utilize screw clamping connections to ensure a fast and secure connection of conductors.

3.Specifications

Type	Standard		IEC/EN 60947-3, AS60947.3
Electrical features	Function		Isolator, Control
	Poles	P	4
	Utilization category		DC-PV2/DC-PV1/DC-21B
	Rated frequency		DC
	Rated operational voltage(Ue)	V	300, 600, 800, 1000, 1200
	Rated operational current(Ie)		see below table
	Rated insulation voltage(Ui)	V	1200
	Conventional free air thermal current(Ithe)		//
	Conventional enclosed thermal current(Ithe)		same as Ie
	Rated short-time withstand current(Icw)		1kA, 1s
	Rated impulsed withstand voltage(Uimp)	kV	8
	Overvoltage category	t	II
	Suitability for isolation		Yes
	Polarity		NO polarity,“+”and“-”polarities could be interchanged
Mechanical features	Electrical life	t	2000
	Mechanical life	t	18000
Installation	Ingress protection		IP66
	Storge temperature	℃	-40~+85
	Mounting		Vertically or horizontally
	Pollution degree		3

Wiring	Type	300V	600V	800V	1000V	1200V
2P/4P	BXPV-ELR2 16	16A	16A	12A	8A	6A
	BXPV-ELR2 25	25A	25A	15A	9A	7A
	BXPV-ELR2 32	32A	27A	17A	10A	8A
4T/4B/4S	BXPV-ELR2 16	16A	16A	16A	16A	16A
	BXPV-ELR2 25	25A	25A	25A	25A	25A
	BXPV-ELR2 32	32A	32A	32A	32A	32A
2H	BXPV-ELR2 16	35A	35A	/	/	/
	BXPV-ELR2 25	40A	40A	/	/	/
	BXPV-ELR2 32	45A	40A	/	/	/

D

4.Connection Diagram

Type	2-pole	4-pole	2-pole 4-pole in series Input and Output bottom	2-pole 4-pole in series Input and Output on top	2-pole 4-pole in series Input on top and Output bottom	2-pole 4 paralleted poles
/	2P	4P	4T	4B	4S	2H
Contacts wiring graph						
Switching example	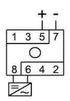	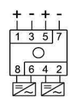			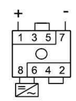	

5.Dimensions

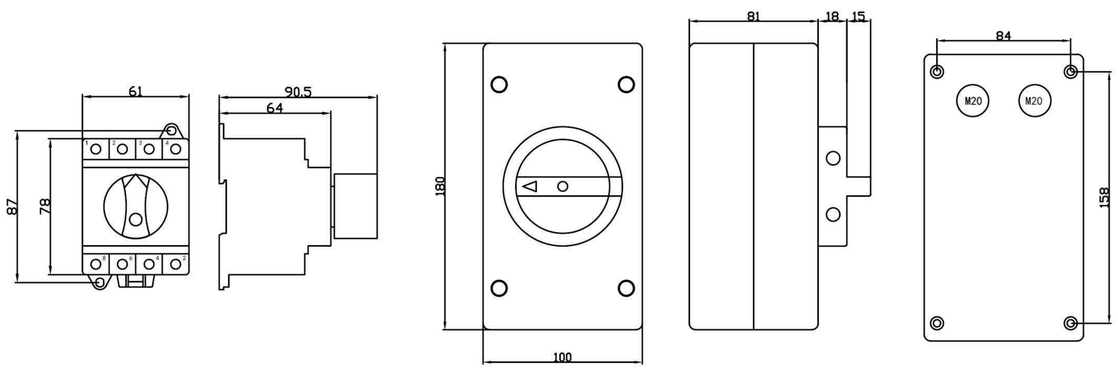

6.Order Note

Following items should be marked when ordering	Ordering sample
Product name, model Poles Rated current Quantity	To order the DC Isolator Switch BXPV-ELR2, 4P, rated current is 32A, Rated operational voltage is 600V, and quantity is 100 pieces, should be marked: BXPV-ELR2 4P 32A 600V, 100 PCS.