1.Function

This product applies to terminal of AC 50Hz(or 60Hz), rated operating voltage up to 400V and rated current up to 63A, equipped with various modular electric for functions of electric energy distribution,control,(short circuit,overload,earth leakage, over-voltage) protection,signal,measurement of terminal electric appliance.
IEC60439-3.

2.Nomenclature

EBS 5D F - 8

- 8 — No. of ways
- F — F: flush S: surface
- 5D — Design code
- EBS — Company code

3.Main Technical Data

- Equipped with transparent/white door
- Single row: door open upward 90 degrees
- Rated current: 63A
- Material: insulating, self-extinguishing fire material
- Protection grade: indirect contact proof 2 protection

4.Normal Application and Installation Conditions

- Ambient temperature: -5°C~+40°C. the average value within 24 hours shall not exceed +35;
- Altitude: Installation altitude shall not exceed 2000m.
- Humidity: Relative humidity shall not exceed 50% when the ambient temperature is +40°C. Higher relative humidity is allowed at lower temperature, for example, it can reach 90% at 20°C.
- Pollution grade: grade 2
- Installation category (over-voltage category): Ⅱ

5.Structure

Symmetric base enclosure: solid enclosure can be embedded into thinner wall; knockouts of various sizes on four sides of box;
Single row connecting rail can be adjusted vertically; single row: adjustable rail depth; Flat front panel can be used reversely; equipped with arc door; front panel shield can be knocked out to increase number of ways.

6.Specifications

Transparent door	Max.rated current up to 63A				
No. of ways	Number bar holes			Earth bar holes	Type Code
	1	2	3		
2	—	—	—	—	5DF-2-B
4	4XΦ5	—	—	3XΦ5	5DF-4-B
6	6XΦ5	—	—	3XΦ5	5DF-6-B
8	8XΦ5	—	—	4XΦ5	5DF-8-B
12	12XΦ5	—	—	6XΦ5	5DF-12-B
18	18XΦ5	—	—	9XΦ5	5DF-18-B
24	24XΦ5	9XΦ5	—	13XΦ5	5DF-24-B
36	36XΦ5	9XΦ5	9XΦ5	13XΦ5	5DF-36-B
2	—	—	—	—	5DS-2-B
4	4XΦ5	—	—	3XΦ5	5DS-4-B
6	6XΦ5	—	—	3XΦ5	5DS-6-B
8	8XΦ5	—	—	4XΦ5	5DS-8-B
12	10XΦ5	—	—	6XΦ5	5DS-12-B
18	13XΦ5	—	—	9XΦ5	5DS-18-B
24	13XΦ5	9XΦ5	—	13XΦ5	5DS-24-B
36	13XΦ5	9XΦ5	9XΦ5	13XΦ5	5DS-36-B

White door	Max.rated current up to 63A				
No. of ways	Number bar holes			Earth bar holes	Type Code
	1	2	3		
2	—	—	—	—	5DF-2-A
4	4XΦ5	—	—	3XΦ5	5DF-4-A
6	6XΦ5	—	—	3XΦ5	5DF-6-A
8	8XΦ5	—	—	4XΦ5	5DF-8-A
12	12XΦ5	—	—	6XΦ5	5DF-12-A
18	18XΦ5	—	—	9XΦ5	5DF-18-A
24	24XΦ5	9XΦ5	—	13XΦ5	5DF-24-A
36	36XΦ5	9XΦ5	9XΦ5	13XΦ5	5DF-36-A
2	—	—	—	—	5DS-2-A
4	4XΦ5	—	—	3XΦ5	5DS-4-A
6	6XΦ5	—	—	3XΦ5	5DS-6-A
8	8XΦ5	—	—	4XΦ5	5DS-8-A
12	10XΦ5	—	—	6XΦ5	5DS-12-A
18	13XΦ5	—	—	9XΦ5	5DS-18-A
24	13XΦ5	9XΦ5	—	13XΦ5	5DS-24-A
36	13XΦ5	9XΦ5	9XΦ5	13XΦ5	5DS-36-A

M

7.Dimensions

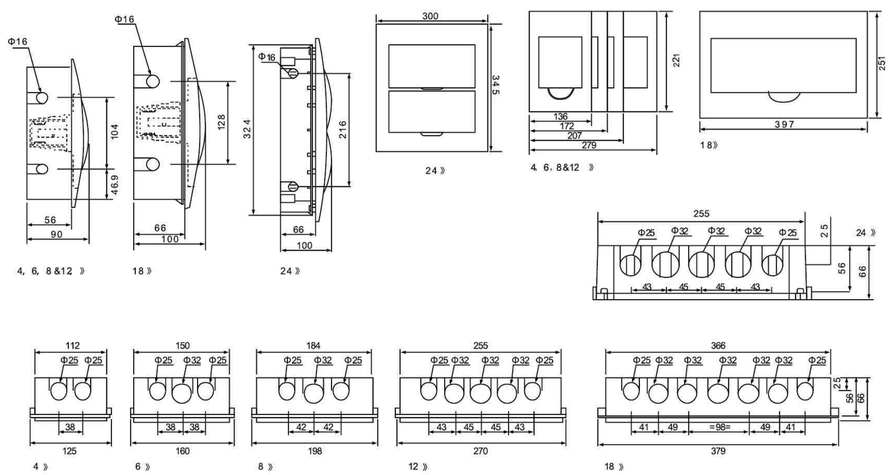

EBS5DF

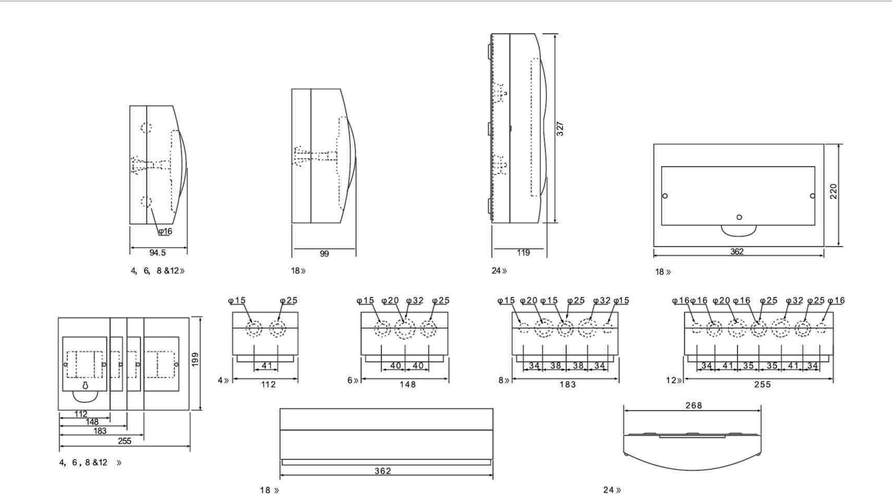

EBS5DS

8.Order Note

Following items should be marked when ordering	Ordering sample
Product name, model Color of the door Number of ways & Installation type Quantity	To order the EBS5D series distribution box, white door, 8 ways, flush installation type, and quantity is 100 pieces, should be marked: EBS5DF-8: white, flush, 100PCS.