1.Function

EBS6BN Series circuit breaker is used in protection lighting or power distribution system from over-load and short-circuit, apply to the circuit of AC 50/60Hz, rated voltage less than 415V. The product adopt high fire resistant and shockproof plastics, quality metal materials, which is neoteric in structure, light in weight, reliable in performance.
Products comply with IEC/EN60898-1.

2.Nomenclature

EBS 6BN - 63 / 1P

- 1P — Poles
- 63 — Frame level
- 6BN — Design code
- EBS — Company code

3.Specifications

Type	Standard		IEC/EN 60898-1
Electrical features	Rated current In	A	1, 2, 3, 4, 6, 10, 16, 20, 25, 32, 40, 50, 63, 70
	Poles	P	1, 2, 3, 4,1P+N,3P+N
	Rated voltage Ue	V	240/415
	Insulation voltage Ui	V	500
	Rated frequency	Hz	50/60
	Rated breaking capacity	A	6000
	Rated impulse withstand voltage(1.2/50)Uimp	V	6000
	Dielectric test voltage at ind. Freq. for 1min	kV	2
	Pollution degree		2
	Thermo-magnetic release characteristic		B, C, D
Mechanical features	Electrical life	t	4000
	Mechanical life	t	10000
	Protection grade		IP20
	Reference temperature for setting of thermal element	°C	30
	Ambient temperature (with daily average≤35°C)	°C	-5~+40
	Storage temperature	°C	-25~+70
Installation	Terminal connection type		Cable/Pin-type busbar/U-type bar
	Terminal size top / bottom for cable	mm²	25
		AWG	18/3
	Terminal size top / bottom for busbar	mm²	25
		AWG	18/3
	Tightening torque	N*m	2.5
		In-lbs	22
	Mounting		On DIN rail EN 60715(35mm)by means of fast clip device
	Connection		From top and bottom

4.Release

Item	Tripping Curve	Test current In(A)	Initial Status	Time limit for tripping or non-tripping	Expected result	Remarks
a	B/C/D	1.13In	Cold	t≤1h	Non-tripping	Current smoothly rises to specified value within 5s
b	B/C/D	1.45In	Following item a test	t<1h	Tripping	
c	B/C/D	2.55In	Cold	1s<t<60s(In≤32A) 1s<t<120s(In>32A)	Tripping	
d	B	3In	Cold	t≤0.1s	Non-tripping	Switch on the power supply by closing the auxiliary switch
	C	5In				
	D	10In				
e	B	5In	Cold	t<0.1s	Tripping	
	C	10In				
	D	20In				

Note: The term"cold "means that the test is carried out at a reference calibration temperature without load before the test.

Curve B

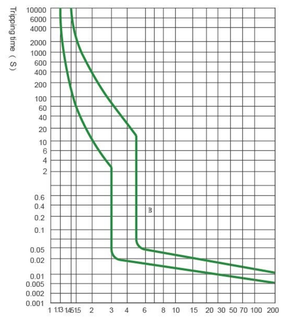

Multiple of rated current

Curve C

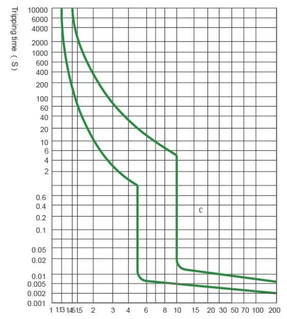

Multiple of rated current

Curve D

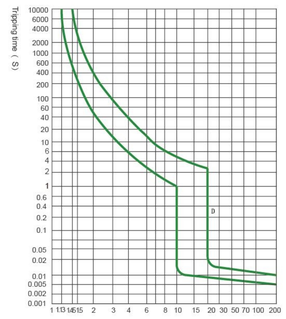

Multiple of rated current

5.Conductor

Copper cross-section(mm²)	Rated current In(A)
1	In≤6
1.5	6<In≤13
2.5	13<In≤20
4	20<In≤25
6	25<In≤32
10	32<In≤50
16	50<In≤63
25	63<In≤80

M

6.Temperature Derating

The maximum permissible current in a circuit breaker depends on the ambient temperature where the circuit breaker is placed. Ambient temperature is the temperature inside the enclosure or switchboard in which the circuit breakers are installed. The reference temperature is 30℃.

Ambient temperature Rated current (A)	-35℃	-30℃	-20℃	-10℃	0℃	10℃	20℃	30℃	40℃	50℃	60℃
2	2.60	2.52	2.46	2.38	2.28	2.20	2.08	2.00	1.92	1.86	1.76
4	5.20	2.04	4.92	4.76	4.56	4.40	4.16	4.00	3.84	3.76	3.52
6	7.80	7.56	7.38	7.14	6.84	6.60	6.24	6.00	5.76	5.64	5.28
10	13.20	12.70	2.50	12.00	11.50	11.10	10.60	10.00	9.60	9.30	8.90
16	21.12	20.48	20.00	19.20	18.40	17.76	16.96	16.00	15.36	4.88	14.24
20	26.40	25.60	25.00	24.00	23.00	22.20	21.20	20.00	19.20	8.60	17.80
25	33.00	32.00	31.25	30.00	28.75	27.75	26.50	25.00	24.00	23.25	22.25
32	42.56	41.28	40.00	38.72	37.12	35.52	33.92	32.00	30.72	29.76	28.16
40	53.20	51.20	50.00	48.00	46.40	44.80	42.40	40.00	38.40	37.20	35.60
50	67.00	65.50	63.00	60.50	58.00	56.00	53.00	50.00	48.00	46.50	44.00
63	83.79	81.90	80.01	76.86	73.71	70.56	66.78	63.00	60.48	58.90	55.44

When several simultaneously operating circuit breakers are mounted side by side in a small enclosure,the temperature rise inside the enclosure causes a reduction in current rating.
You must then assign the rating (already derated if necessary according to ambient temperature), a derating factor of 0.8.

7.Dimensions

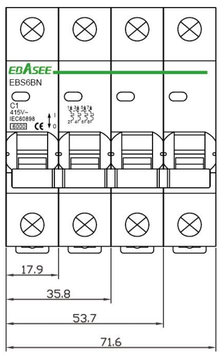

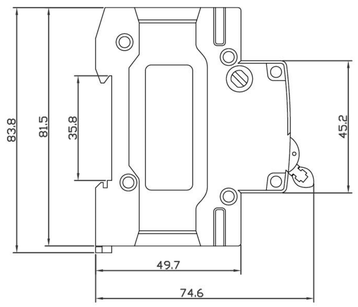

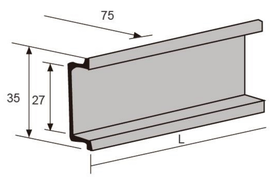

8.Order Note

Following items should be marked when ordering	Ordering sample
Product name, model & frame level Poles Tripping characteristic and rated current Quantity	To order EBS6BN-63 miniature circuit breaker, 2 Poles, curve C, rated current 20A, 6kA quantity is 100 pieces, should be marked: EBS6BN-63/2P C20 6kA, 100PCS.